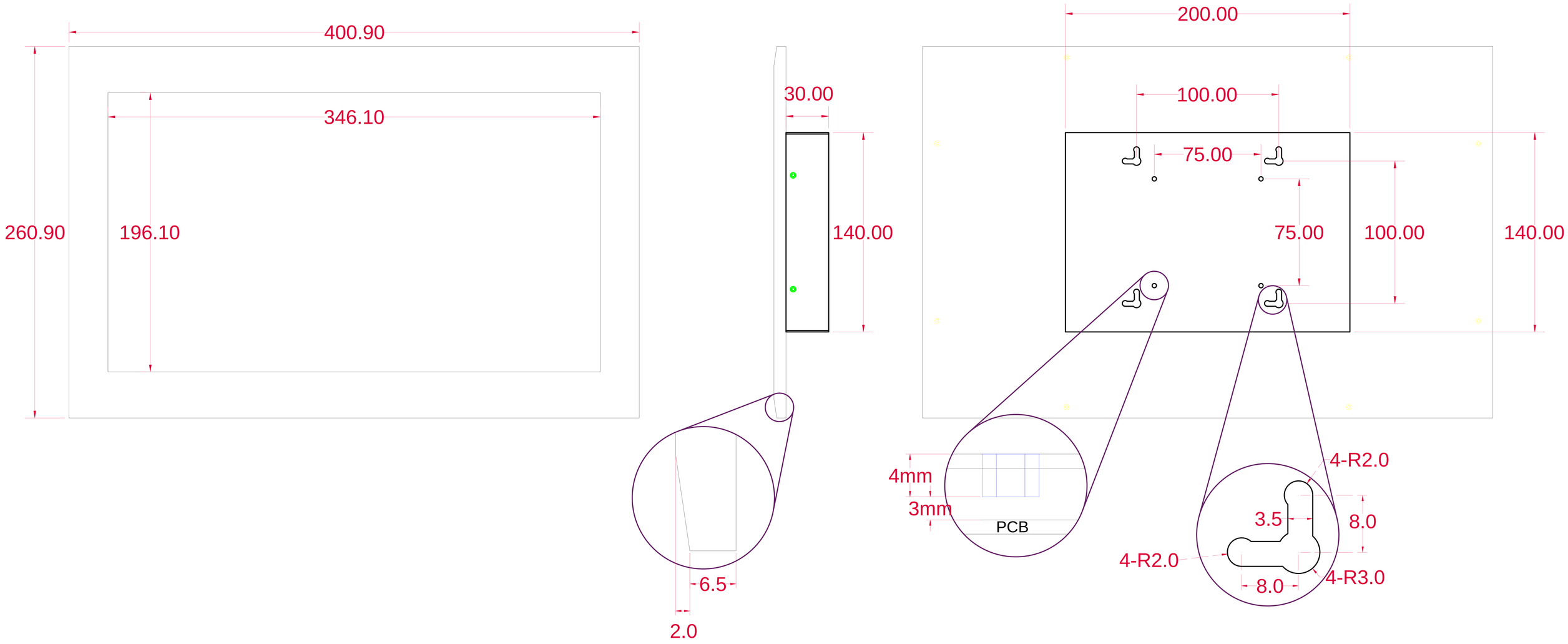
400.90
346.10
260.90
196.10
30.00
140.00
6.5
2.0
200.00
100.00
75.00
75.00
100.00
140.00
4mm
3mm
PCB
4-R2.0
3.5
8.0
4-R2.0
8.0
4-R3.0